M110 Gear Reduced Starter!

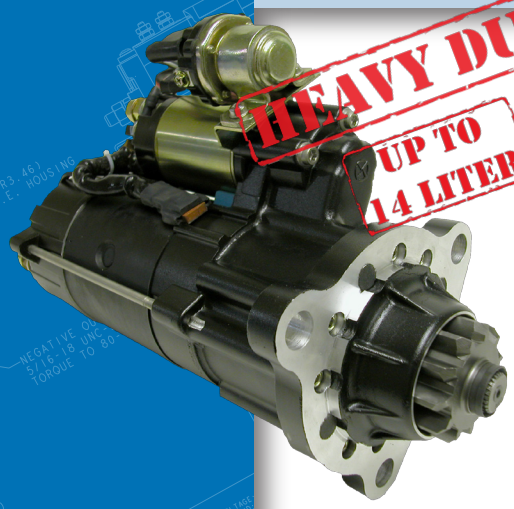

M110R2615SE

Fits Cummins, CAT, & Detroit Diesel S60!

- ***Heavy Duty Starter***
- ***Approved for diesel engines up to 14L***
- ***Weighs less than 30 lbs.***
- ***7.0 kW rated***
- ***Rotatable flange allows for additional applications***
- ***All M110R starters have IMS/ soft start relay***

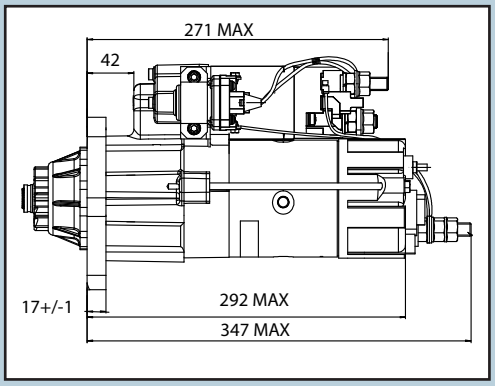

M110615					
Front View	Details	Teeth	Pinion Details		
			Pitch	OD	Pinion at rest
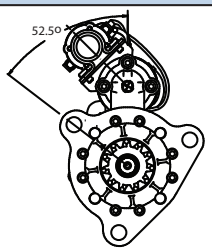	12V CW Rotatable SAE3 Flange	11	6/8	2.26" 57.47mm	1.87" 47.5mm

Typical Applications

Part number	Sales Number	Engine	Application Info.	Delco *	Mitsubishi *
M110R2615SE	M110615	Cummins ISX (11.9L) ISM, N14	Freightliner, Sterling, Western Star, Navistar, Kenworth, Peterbilt	19011518 19011530 19011521 8200091 8200090 19011529 8300019 8300009 8200289 8200308 8200050 8200104 8200290	MIB970975 MIB970975FL FL0975 MIB970777 MIB970777FL FL0777 FL0579 IN1478 D61-6002-004 D61-6002-008 PC0979 PC1479 PC1879 M983579 3815734C91 IN1478
		CAT C12, C13	Navistar, Kenworth, Peterbilt		
		Detroit S60 (11L, 12.7L, **14L)**	Freightliner, Sterling, Western Star, Navistar Kenworth, Peterbilt		

Note: In some instances the starter flange may need to be reclocked.

Maximum engine displacement 14L

* Rotatable flange may allow for additional applications

Contact your Leece-Neville Representative for more information today!

Prestolite electric

Celebrating 100 Years • 1911-2011

Leece-Neville HEAVY DUTY SYSTEMS

7585 Empire Drive | Florence, KY 41042 | (800) 354-0560 | www.prestolite.com